ALEDER

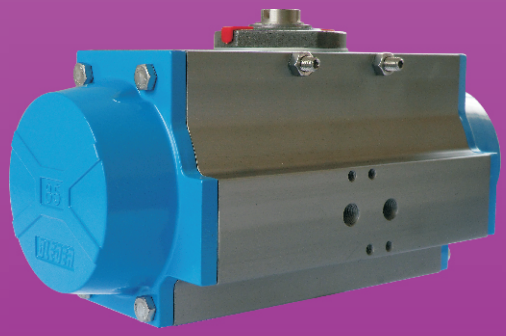

CATALOGO C

CATALOGUE

MOD. 32

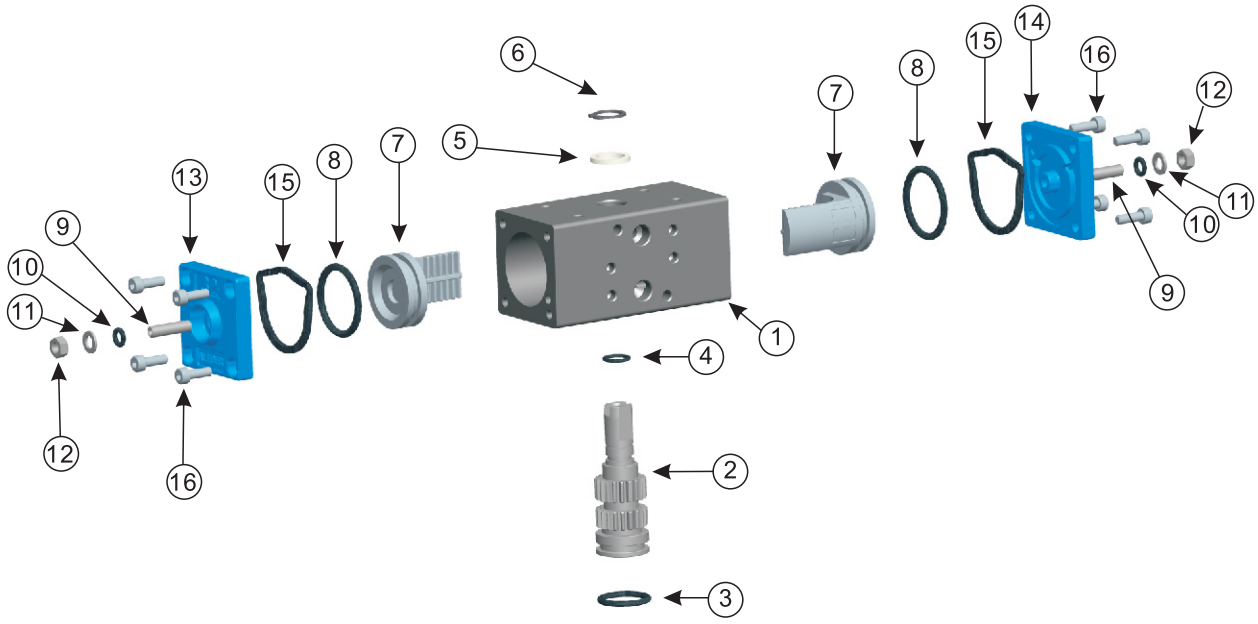

Item	Description	Material	Treatment	DA
1	Body	Extruded aluminium	Hard anodized	1
2	Anti-blowout pinion	Steel	Nickel plated	1
• 3	Lower pinion o-ring	NBR		1
• 4	Top pinion o-ring	NBR		1
• 5	Spacer ring	POM		1
6	Pinion snap ring	Steel	Nickel plated	1
7	Piston	Die cast aluminium		2
• 8	Piston o-ring	NBR		2
9	Stop bolt	Stainless steel		2
• 10	Stop bolt o-ring	NBR		2
11	Washer	Stainless steel		2
12	Stop bolt retaining nut	Stainless steel		2
13	Left end cap	Die cast aluminium	Painted	1
14	Right end cap	Die cast aluminium	Painted	1
15	End cap seats	NBR		2
16	End cap fixing screw	Stainless Steel		8

• Parts subject to wear

MOD. 52-160

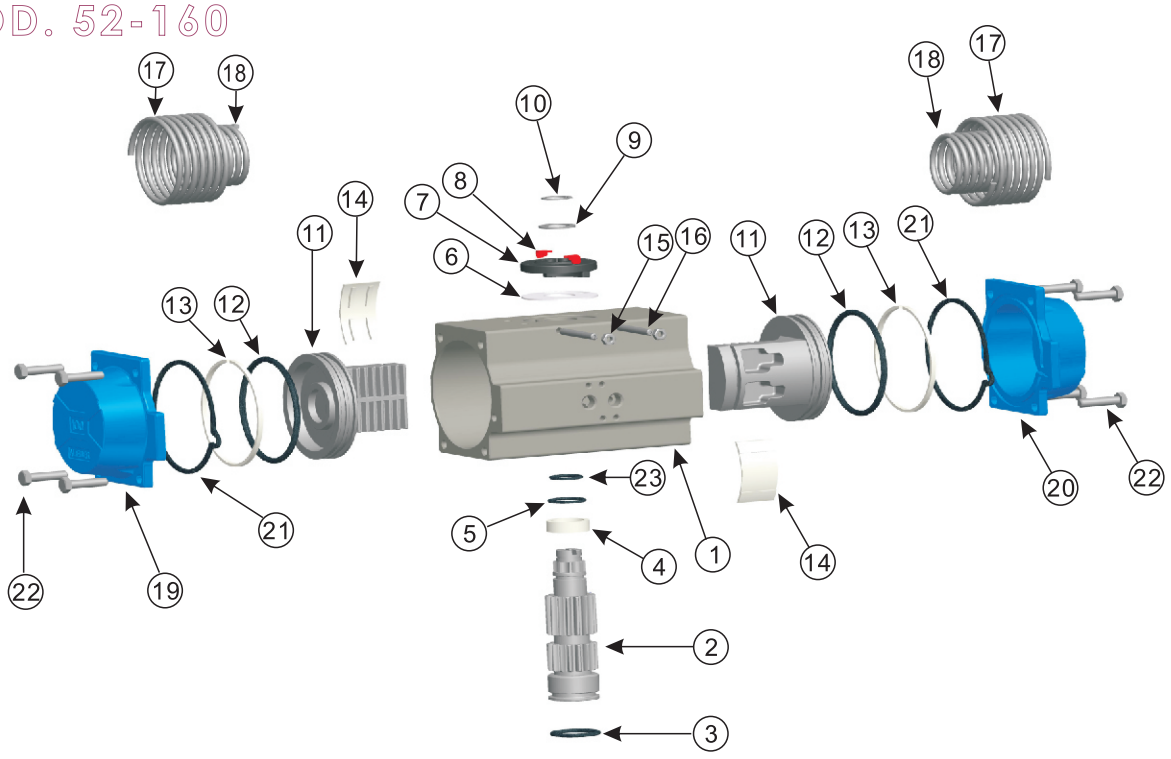

Item	Description	Material	Treatment	DA	SR
01	Body	Extruded aluminium	Hard anodized	1	1
02	Anti-blowout pinion	Steel	Nickel plated	1	1
• 03	Lower pinion o-ring	NBR		1	1
• 04	Pinion spacer ring	POM		1	1
• 05	Top pinion o-ring	NBR		1	1
• 06	*Cam spacer ring*	POM		1	1
07	*Cam*	Stainless steel		1	1
08	Position indicator	Nylon		2	2
09	Pinion washer	Stainless steel		1	1
** 10	Pinion snap ring	Steel	Nickel plated	1	1
11	Piston	Die cast aluminium		2	2
• 12	Piston o-ring	NBR		2	2
• 13	Antifriction ring	POM		2	2
• 14	Piston thrust bolck	POM		2	2
15	Stop bolt retaining nut	Stainless Steel		2	2
16	Stop bolt	Stainless Steel		2	2
17	External spring	Steel	Zinc-phosphate	0	Please see the Spring setting
18	Internal spring	Steel	Zinc-phosphate	0	
19	Left end cap	Die cast aluminium	Painted	1	1
20	Right end cap	Die cast aluminium	Painted	1	1
21	End cap seats	NBR		2	2
22	End cap fixing screw	Stainless Steel		8	8
23	TOP Pinion o-ring	NBR		1	1

• Parts subject to wear

** Reinforced series DIN 471- UNI 7436

MOD. 200 - 350

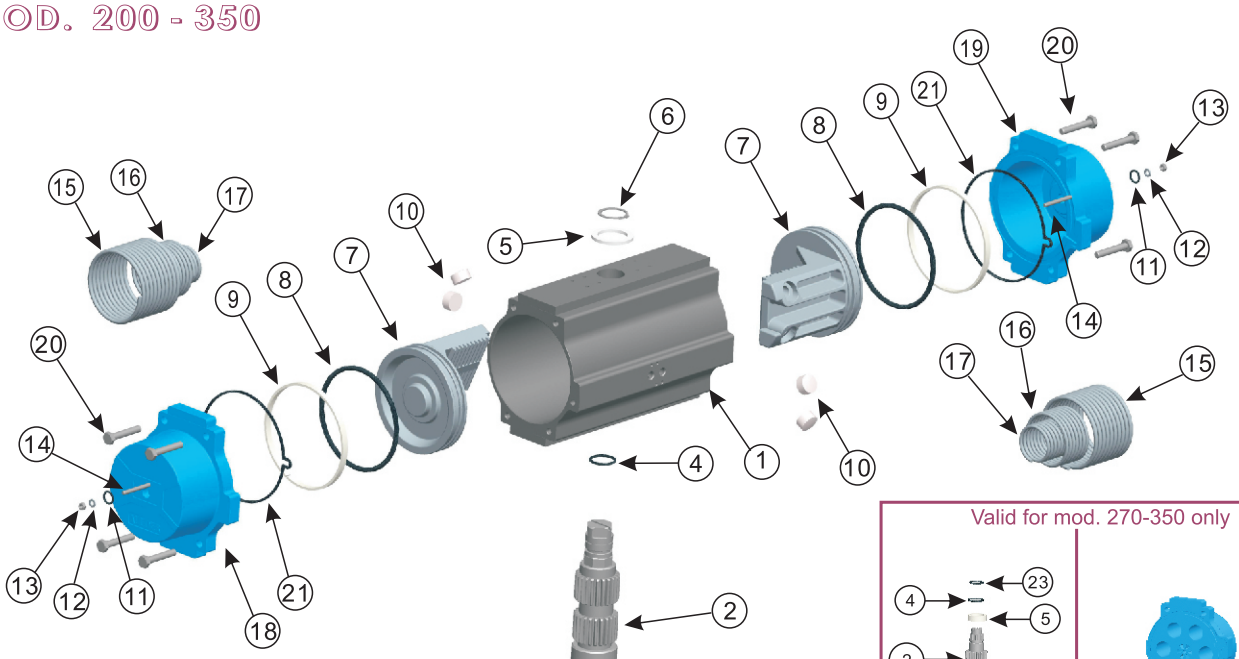

Item	Description	Material	Treatment	DA	SR
1	Body	Extruded aluminium	Hard anodized	1	1
2	Anti-blowout pinion	Steel	Nickel plated	1	1
• 3	Lower pinion o-ring	NBR		1	1
• 4	Top pinion o-ring	NBR		1	1
• 5	Spacer ring	POM		1	1
6	Pinion snap ring	Steel	Nickel plated	1	1
7	Piston	Die cast aluminium		2	2
• 8	Piston o-ring	NBR		2	2
• 9	Antifriction ring	PTFE 15% graphite		2	2
• 10	Piston thrust bolck	POM		4 [6]	4 [6]
• 11	Stop bolt o-ring	NBR		2	2
12	Washer	Stainless Steel		2	2
13	Stop bolt retaining nut	Stainless Steel		2	2
14	Stop bolt	Stainless Steel		2	2
15	External spring	Steel	Zinc-phosphate	0	Please see the Spring setting
16	Central spring	Steel	Zinc-phosphate	0	
17	Internal spring	Steel	Zinc-phosphate	0	
18	Left end cap	Die cast aluminium	Painted	1	1
19	Right end cap	Die cast aluminium	Painted	1	1
20	End cap fixing screw	Stainless Steel		8 (12)	8 (12)
21	End cap fixing screw	NBR		2	2
22	Precompressed spring***	Steel		0	Please see the Spring setting
23	Lower pinion o-ring	NBR		1	1

• Parts subject to wear

[6] (12) *** Valid for mod. 270-350 only

DIMENSIONS（MOD.52-160）

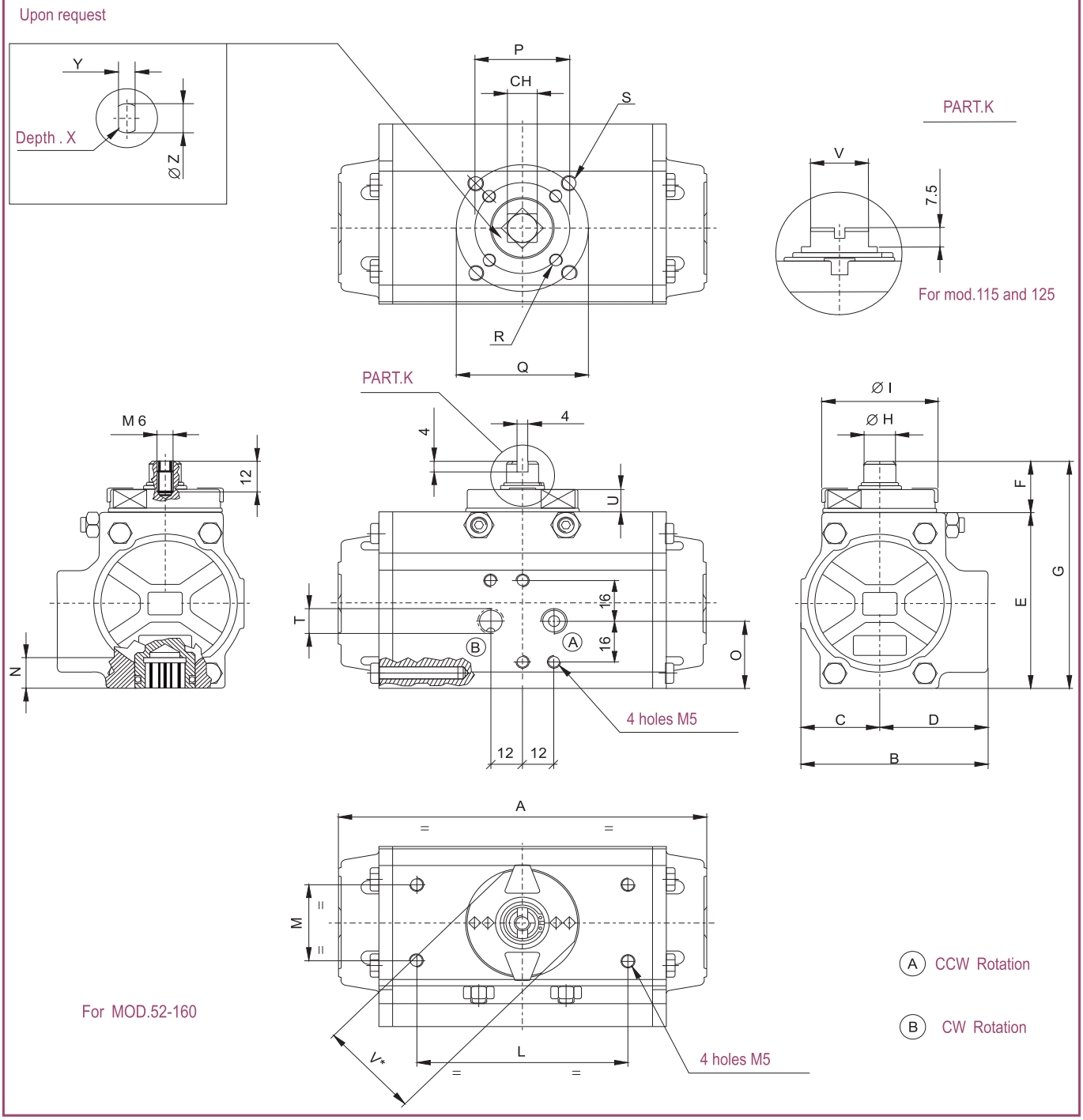

MOD.	FORATURA ISO5211	CH	A	B	C	D	E	F	G	ØH	ØI	L	M	N	O	P	Q	R	S	T	U	V	ØZ	Y	X
52	F03-F05**	11	139.5	71	30	41	69.5	20	89.5	12	44	80	30	12	26.5	36	50	M5X7.5	M6X9	1/8''	8	38	14.1	11	12
63	F05-F07	14	162	80.5	35.5	45	80.5	20	100.5	14.8	50	80	30	16	27.5	50	70	M6X8	M8X12	1/8''	8	41	18.1	14	16
75	F05-F07	17	207	94.5	42	52.5	97	20	117	18	63	80	30	19	35	50	70	M6X8	M8X12	1/8''	9	50	22.2	17	19
85	F05-F07	17	237.5	106	47.5	58.5	108.5	20	128.5	20	63	80	30	19	42	50	70	M6X8	M8X12	1/8''	9	50	22.2	17	30
100	F07-F10	17	271.5	123	55	68	121.5	20	141.5	20	63	80	30	20.5	50	70	102	M8X8	M10X14	1/4''	9	50	22.2	17	30
115	F07-F10	22	328	137	64	73	141.5	30	171.5	32	86	130	30	24	50	70	102	M8X12	M10X15	1/4''	14.5	22	28.2	22	39
125	F07-F10	22	366	148	68	80	153.5	30	183.5	32	86	130	30	24	61	70	102	M8X12	M10X15	1/4''	14.5	22	28.2	22	39
140	F10-F12	27	431.7	164	77	87	175	30	205	35	88	130	30	30	72	88	125	M10X19	M12X23	1/4''	14.5	24	37	27	39
160	F10-F12	27	522	187	87	100	218	30	223	40	---	130	30	30	30	88	125	M10X15	M12X18	1/4''	*	*	37	27	48

** Upon request FO4

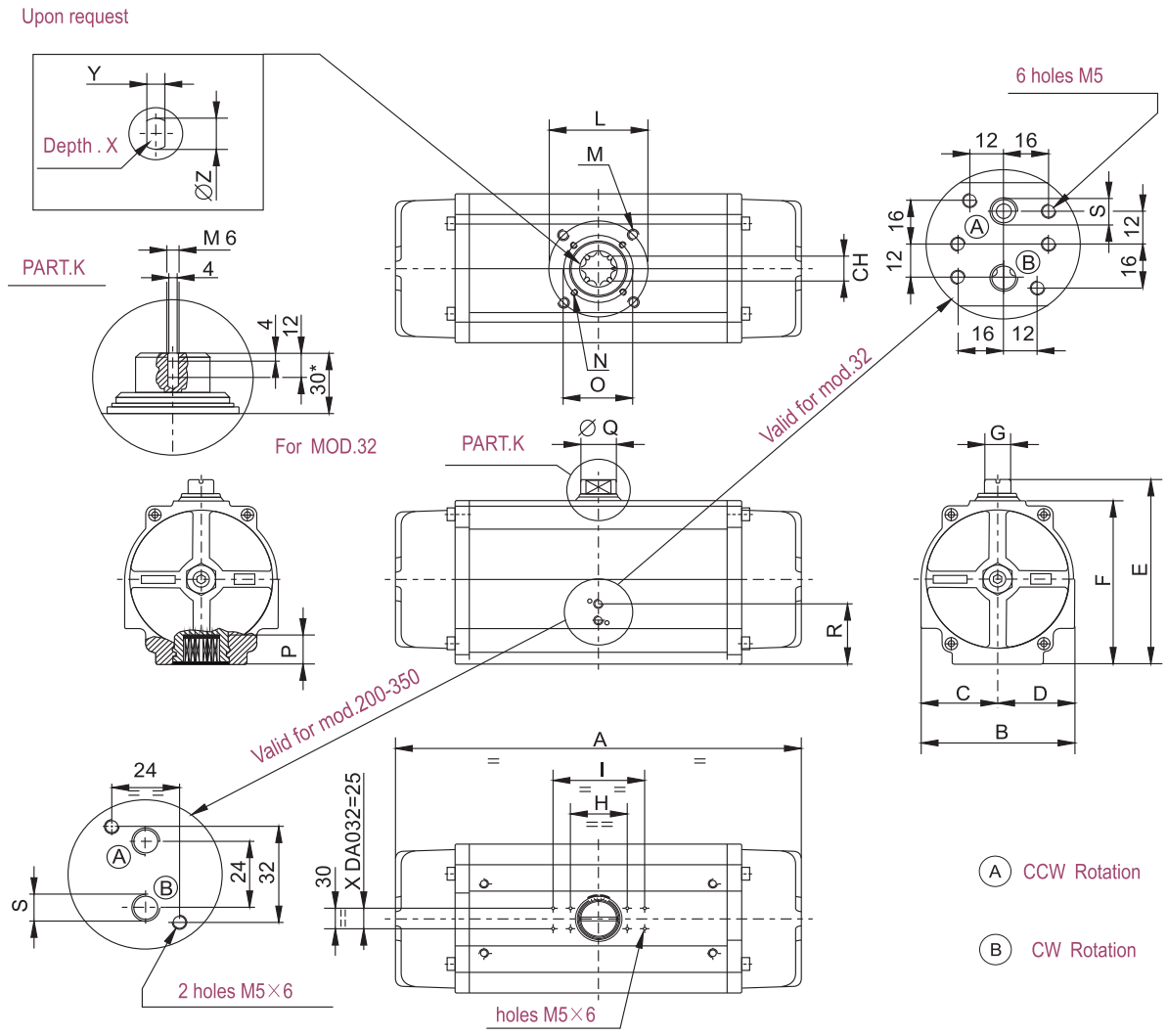

MOD.	FORATURA ISO5211	CH	A	B	C	D	E	F	G	H	I	L	M	N	O	P	Q	R	S	Z	Y	X
32	F03	9	110	45	22.5	22.5	65	45	10	50	-	36	M5X7.5	-	-	12	11.8	-	1/8''	12.1	9	16
200	F14	36	575	218	109	109	269	239	36	80	130	140	M16X25	-	-	39	48	88	1/4''	48.2	36	31
240	F14	46	615	260	130	130	324	296	36	80	130	140	M16X25	-	-	48	48	116	3/8''	-	-	-
270	F16	46	672	290	145	145	361	331	36	80	130	165	M20X30	-	-	52	50	121	3/8''	60.2	46	82
300	F16	46	790	324	162	162	395	370	36	-	130	165	M20X30	-	-	52	50	131	3/8''	-	-	-
350	F16-25	60	876	376	188	188	459	432	36	-	130	254	M16X35	M20X30	165	52	50	142	3/8''	76.2	60	100

Kit for closed position adjustment optional mod.200-350

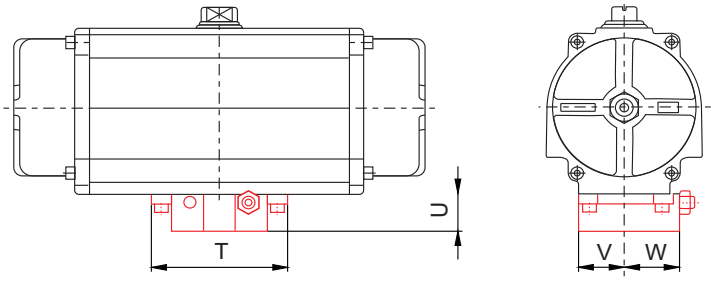

DOUBLE ACTING ACTUATOR

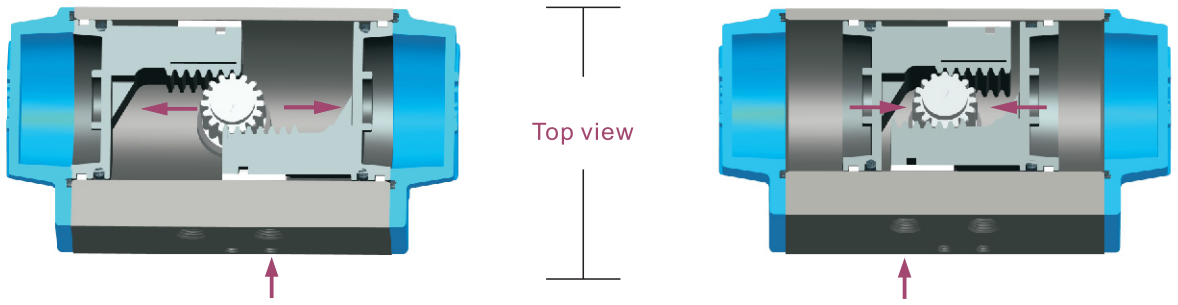

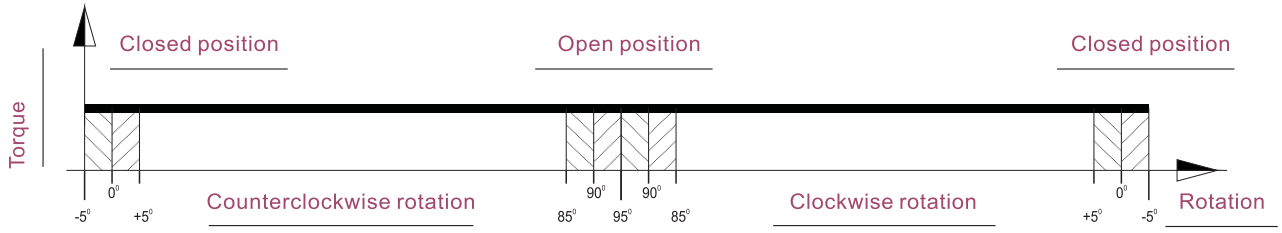

With reference to the above diagram it can be noted that the torque of a double acting actuator remains constant through-out the complete action. The user can decide on which model to choose according to his/her own specific requirements, using the following guidelines:

1. Define the maximum torque of the valve to automate.
2. To obtain a safety factor increase the torque value chosen by 25%-50% (subject to the type of valve and working conditions).
3. Once the torque value suggested is obtained consult the torque chart and in relation to the corresponding air pressure find a torque value exact to or exceeding the one obtained.
4. Once the torque value is determined move horizontally to the column "model" to find the actuator *model required.*

Type	Air supply pressure(bar)							
	2.5	3	4	5	5.5	6	7	8
	Torque output double acting actuators(Nm)							
DA32	3.5	4.2	6	7.5	8	9	10	11.5
DA52	8.8	10.7	14.5	18.3	20.2	22.1	25.9	29.8
DA63	15.6	19.1	25.9	32.8	36.2	39.6	46.5	53.3
DA75	28.9	35.1	47.5	59.8	66	72.2	84.5	96.9
DA85	41.4	50.4	68.6	86.7	95.8	104.9	123	141.2
DA100	65.7	79.8	108	136.3	150.4	164.6	192.8	221.1
DA115	108.8	132.2	178.9	225.6	248.9	272.3	319	365.7
DA125	143.3	174	235.3	296.6	327.3	358	419.3	480.6
DA140	216.7	260.1	346.8	433.5	476.8	520.2	606.9	693.6
DA160	300	360	480	600	660	720	840	960
DA200	562	675	900	1125	1237	1350	1575	1800
DA240	805	969	1292	1615	1776	1938	2261	2584
DA270	1304	1565	2086	2608	2869	3130	3651	4173
DA300	1562	1875	2500	3124	3436	3749	4374	5000
DA350	2575	3091	4122	5152	5667	6182	7213	8243

SPRING RETURN ACTUATOR

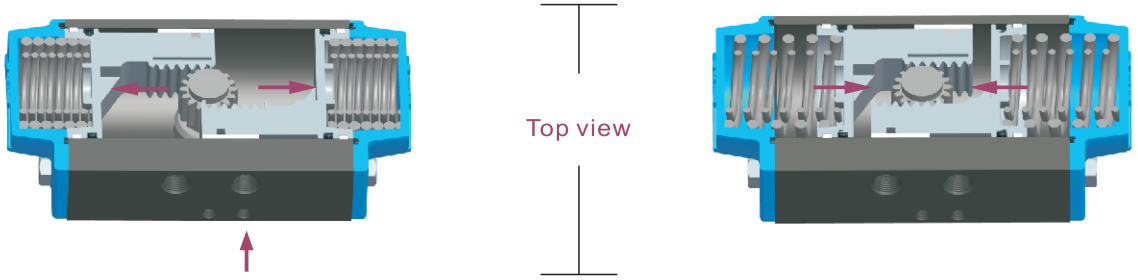

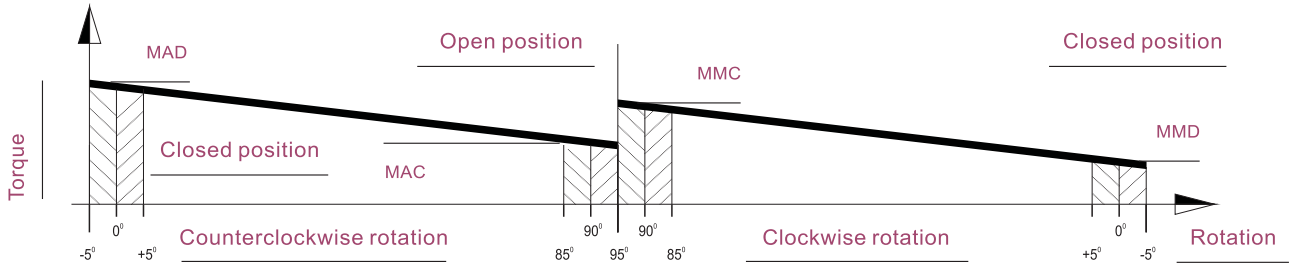

With reference to the above diagram the torque of a spring return actuator is not constant but decreasing. This is due to the action of the springs that when compressed during air actuation counteract the piston movement and accumulate energy which will be available in a decreasing way during the rotation inversion.
The torque given by the actuator is defined by four fundamental values.
Opening rotation
MAD=Actuator torque with unfolded springs
MAC=Actuator torque with compressed springs
Closing rotation
MMC=Torque with compressed springs
MMD=Torque with unfolded springs
The user can decide on which model to chose according to his/her own specific requirements, using the following guidelines:
1. Define the maximum torque of the valve to automate.
2. To obtain a safety factor increase the torque value chosen by 25%-50% (subject to the type of valve and working conditions).
3. Once the torque value suggested is obtained consult the torque chart and in relation to the corresponding air pressure find the torque value exact to or exceeding the one obtained, taking account of the lower value between the MMD and MAC values.
4. Once the torque value is determined move horizontally to the column "model" to find the actuator model required.

Spring setting

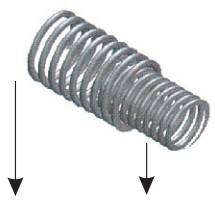

SET	External spring	Internal spring
01	1	1
02	2	/
03	1	2
04	2	1
05	2	2

Valid from mod. 52 to 160

Spring setting

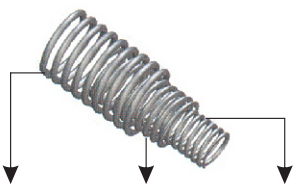

SET	External spring	Centralspring	Internal spring
01	/	2	/
02	2	/	/
03	1	2	/
04	2	/	2
05	2	2	/
06	2	2	2

Valid for mod. 200 to 240

Spring setting

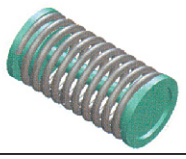

Pretensioned spring

SET	N° of springs for each side
01	2/3
02	3/3
03	3/4
04	4/4
05	4/5
06	5/5
07	5/6
08	6/6

Valid for mod. 270 to350

型号 MOD	设置 SET	弹簧扭矩 (Nm) Spring torque(Nm)		气源压力(bar)/ Air supply pressure(bar)															
				2.5		3		4		5		5.5		6		7		8	
				弹簧复位执行机构输出扭矩(Nm)/ Torque output spring return actuators(Nm)															
		MMD 0°	MMC 90°	MAD 0°	MAC 90°	MAD 0°	MAC 90°	MAD 0°	MAC 90°	MAD 0°	MAC 90°	MAD 0°	MAC 90°	MAD 0°	MAC 90°	MAD 0°	MAC 90°	MAD 0°	MAC 90°
SR52	01	4.9	3.6	4.5	1.6	6.4	3.5	10.2	7.4										
	02	6.7	4.8			5.2	1.7	9.0	5.6	12.8	9.4								
	03	7.5	5.2					8.6	4.8	12.4	8.6	14.3	10.5	16.2	12.4				
	04	9.3	6.5					7.3	3.0	11.2	6.8	13.1	8.7	15.0	10.6	18.8	14.5		
	05	11.9	8.1							9.5	4.3	11.4	8.2	13.3	8.1	17.1	11.9	20.9	15.7
SR63	01	9.6	5.0	8.6	2.6	12.0	6.0	18.9	12.8										
	02	12.3	6.6			10.5	3.2	17.4	10.1	24.2	17.0								
	03	14.5	8.0					15.9	7.9	22.8	14.8	26.2	18.2	29.6	21.7				
	04	17.2	9.6					14.4	5.2	21.2	12.0	24.6	15.5	28.1	18.9	34.9	25.8		
	05	22.1	12.5							18.2	7.1	21.7	10.6	25.1	14.0	31.9	20.9	38.8	27.7
SR75	01	19.5	10.1	15.8	3.9	22.0	10.1	34.4	22.5										
	02	25.6	13.3			18.8	4.0	31.2	16.4	43.5	28.7								
	03	28.2	15.1					29.4	13.8	41.8	26.1	48.0	32.3	54.1	38.5				
	04	34.3	18.3					26.2	7.7	38.6	20.0	44.8	26.2	50.9	32.4	63.3	44.8		
	05	43.0	23.2							33.6	11.3	39.8	17.5	46.0	23.7	58.3	36.1	70.7	48.4
SR85	01	27.3	16.1	22.2	7.6	31.3	16.6	49.5	34.8										
	02	33.7	19.9			27.6	10.3	45.7	28.4	63.9	46.6								
	03	40.8	24.3					41.3	21.3	59.4	39.5	68.5	48.6	77.6	57.6				
	04	47.1	28.1					37.5	15.0	55.7	33.1	64.8	42.2	73.8	51.3	92.0	69.4		
	05	60.6	36.3							47.5	19.6	56.6	28.7	65.6	37.8	83.8	55.9	101.9	74.1
SR100	01	44.6	24.6	36.0	10.1	50.2	24.2	78.4	52.5										
	02	58.9	32.6			42.2	9.9	70.5	38.1	98.7	66.4								
	03	63.7	35.9					67.1	33.3	95.4	61.6	109.5	75.7	123.6	89.9				
	04	78.0	43.9					59.1	19.0	87.4	47.3	101.5	61.4	115.7	75.5	143.9	103.8		
	05	97.2	55.2							76.1	28.1	90.2	42.3	104.3	56.4	132.6	84.7	160.8	112.9
SR115	01	74.4	41.0	61.3	18.4	84.7	41.8	131.4	88.5										
	02	94.4	50.7			74.9	21.8	121.6	68.5	168.3	115.2								
	03	108.1	60.8					111.6	54.7	158.3	101.5	181.6	124.8	205.0	148.2				
	04	128.1	70.6					101.8	34.8	148.5	81.5	171.9	104.9	195.2	128.2	241.9	174.9		
	05	161.8	90.4							128.7	47.8	152.0	71.1	175.4	94.5	222.1	141.2	268.8	187.9
SR125	01	99.1	53.1	80.2	21.2	110.9	51.9	172.2	113.2										
	02	117.5	63.3			100.7	33.5	162.1	94.8	223.4	156.1								
	03	148.4	81.1					144.2	63.9	205.5	125.2	236.2	155.9	266.8	186.5				
	04	166.9	91.3					134.1	45.5	195.4	106.8	226.1	137.5	256.7	168.1	318.0	229.4		
	05	216.2	119.2							167.4	57.5	198.1	88.1	228.7	118.8	290.1	180.1	351.4	241.4
SR140	01	156.3	66.4	134	53	161	71.2	236.8	146.9										
	02	190.8	81.5			145	65.6	222.2	112.4										
	03	217.3	92.2					210.9	86	286.7	161.8	324	199						
	04	251.8	106.9							272.5	127.2	309	165	347.9	203	423	278	499	355
	05	312.6	132.7											322.5	142	398	217	473.6	293
SR160	01	152	100	186	126	245	188												
	02	225	147			198	116	317	234										
	03	264	173			170	74	290	193	407	311								
	04	321	200					260	136	378	255	437	312						
	05	376	252							330	191	388	251	447	310				
	06	473	300									335	161	395	220	512	332	627	445
SR200	01	245	174	362	270	472	387												
	02	356	247			398	273	621	498										
	03	424	298			344	192	568	425	789	649								
	04	531	353					510	317	731	541	842	651						
	05	602	421							655	447	767	562	878	675				
	06	776	527									662	396	777	510	994	721	1209	935

MOD	SET	Spring torque(Nm)		Air supply pressure(bar)															
				2.5		3		4		5		5.5		6		7		8	
				Torque output spring return actuators(Nm)															
		MMD 0°	MMC 90°	MAD 0°	MAC 90°	MAD 0°	MAC 90°	MAD 0°	MAC 90°	MAD 0°	MAC 90°	MAD 0°	MAC 90°	MAD 0°	MAC 90°	MAD 0°	MAC 90°	MAD 0°	MAC 90°
SR270	01	788	505	834	545	1109	819	1658	1368										
	02	946	606	726	379	1001	654	1550	1203										
	03	1103	707	619	214	893	488	1442	1037	1991	1586								
	04	1261	808	511	48	785	323	1334	872	1884	1421	2158	1695						
	05	1418	909			678	157	1227	706	1776	1255	2050	1530	2325	1804				
	06	1576	1010					1119	540	1668	1090	1943	1364	2217	1639				
	07	1733	1111					1011	375	1560	924	1835	1198	2109	1473	2659	2022		
	08	1891	1213					904	209	1453	758	1727	1033	2002	1307	2551	1856	3100	2405
SR300	01	1083	575	1081	639	1299	791	1924	1416										
	02	1300	690	936	478	1184	574	1808	1199										
	03	1516	805			1066	398	1693	982	2318	1607								
	04	1733	920					1578	766	2203	1390	2515	1703						
	05	1950	1035							2088	1174	2400	1486	2713	1799				
	06	2166	1150							1973	957	2286	1269	2598	1582	3223	2207		
	07	2383	1266											2483	1365	3107	1990	3732	2615
	08	2600	1381											2368	1149	2992	1774	3617	2398
SR350	01	1795	825	1888	1080	2265	1296	3296	2326										
	02	2154	990	1750	780	2100	936	3130	1967										
	03	2513	1156			1986	710	2965	1608	3996	2638								
	04	2872	1321					2800	1249	3830	2279	4346	2795						
	05	3231	1486							3665	1920	4181	2436	4696	2951				
	06	3590	1651							3500	1561	4016	2076	4531	2592	5561	3622		
	07	3949	1816											4365	2232	5396	3263	6426	4293
	08	4308	1981											4200	1873	5231	2904	6261	3934

Working time (sec.)																
Type \ Model		32	52	63	75	85	100	115	125	140	160	200	240	270	300	350
Counterclockwise rotation	CCW	0.03	0.03	0.06	0.12	0.20	0.30	0.53	0.83	0.95	1.15	1.74	3.10	4.50	5.8	8.40
Clockwise rotation	CW	0.03	0.04	0.08	0.12	0.19	0.27	0.47	0.66	0.88	1.10	1.70	2.92	4.50	5.8	8.25
Counterclockwise rotation	CCW SR	-	0.09	0.14	0.22	0.31	0.44	0.83	1.08	1.40	1.75	2.38	3.75	4.50	8.2	9.80
Clockwise rotation	CW SR	-	0.09	0.14	0.22	0.33	0.46	0.78	0.90	1.14	1.34	2.19	3.50	6.20	8.5	9.75

Approximative times obtained at the pressure of 6 bar without valve

Weight chart (kg)															
Type \ Model	32	52	63	75	85	100	115	125	140	160	200	240	270	300	350
DA90°	0.48	1.05	1.50	2.55	3.40	5.05	8.00	10.00	11.00	19.50	32.80	42.90	71.50	82.00	143.5
SR90°	-	1.20	1.80	3.20	4.30	6.55	10.60	13.40	17.20	24.40	50.50	52.38	88.00	98.80	173.5

Actuator air consumption chart Litres:1 litre=1000cm³																
Type \ Model		32	52	63	75	85	100	115	125	140	160	200	240	270	300	350
Counterclockwise rotation	CCW	0.04	0.10	0.19	0.36	0.51	0.79	1.29	1.63	2.45	3.61	5.70	12.5	15	20.5	31.3
Clockwise rotation	CW	0.03	0.13	0.23	0.44	0.64	1.00	1.71	2.21	3.12	4.76	9.83	14.4	17.8	25.4	37.2
Counterclockwise rotation	CW SR	-	0.11	0.19	0.36	0.53	0.80	1.38	1.78	2.62	3.52	7.58	13.7	15.5	21.3	32.7

Positioner

I-box with inductive proximity switch
Voltage 10-30VDC
Maximum current 100MA

Mechanical change over switch with silver contacts
Voltage 250VAC
Maximum current 16A(250VAC)
2.5A(24VDC)

Wave box with mechanical Exd switch
Voltage 24VDC/250VAC
Maximum current AC:4A/DC:150MA

Intrinsic safe inductive proximity switch
Voltage 8.2VDC
Operating voltage 7.5-30VDC

Solenoid valve

Solenoid valve NAMUR 5/2-and 3/2 ways
Air entry 1/4"
Air pressure 2-10bar

Intrinsic safe solenoid valve NAMUR 5/2-and 3/2 ways,double electric control
Air entry 1/4"
Air pressure 2-10bar

Directly operated poppet valve 3/2 ways
Air entry 1/4"
Air pressure 0-10bar

Directly operated poppet valve 3/2 ways
Air entry 1/8"
Air pressure 0-10bar

API Solenoid valve 5/2 ways
Air entry 1/4"
Air pressure 1-10bar

API Intrinsic safe solenoid valve 5/2 ways
Air entry 1/4"
Air pressure 1-10bar

Solenoid valve

AMISCO coil
Type EVI7/9DC24V
EVI7/9AC220V

AMISCO Explosion-proof coil
Type 3009MD024W3
3009MA220W2

Hand wheel /Bracket

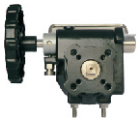

Manually operated devices

Adjustable mounting bracket
Matearial AISI 304

ALEDER

ShangHai ALEDER Industrail Equipment CO.,LTD
TEL: 021-67764015/67764025
FAX: 021-67764026
ZIP CODE: 201613
HTTP//:WWW.ALEDER.CN
Room 9,Jingtai industrail park,
no 225,Zhongcheng road,Songjiang
industrail district,ShangHai